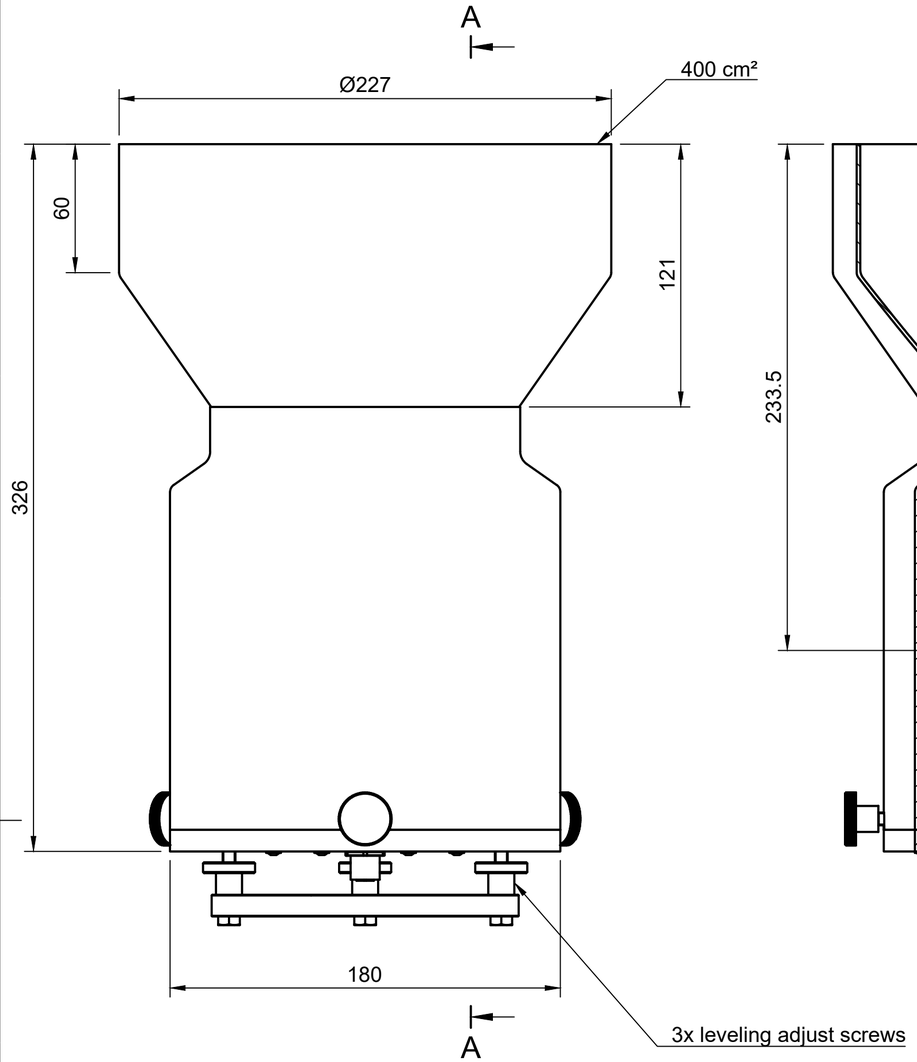

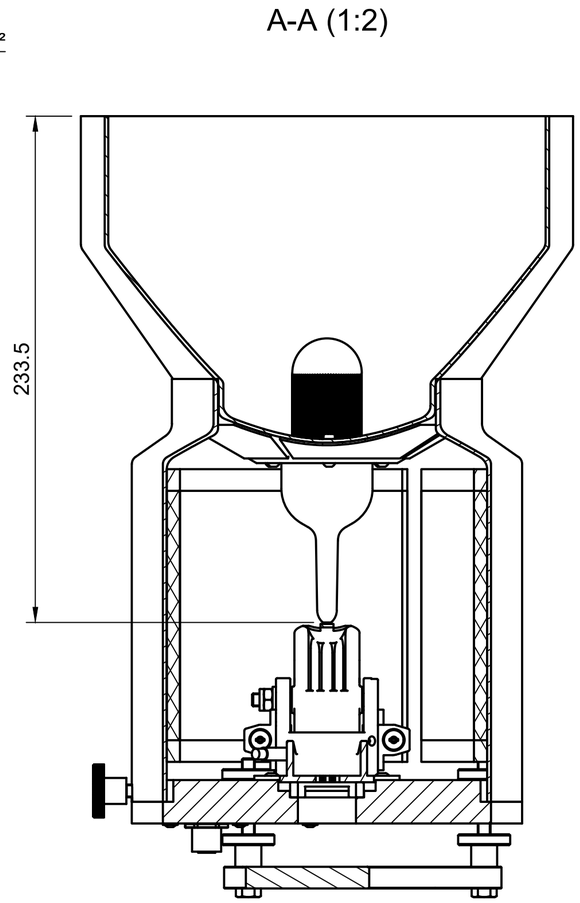

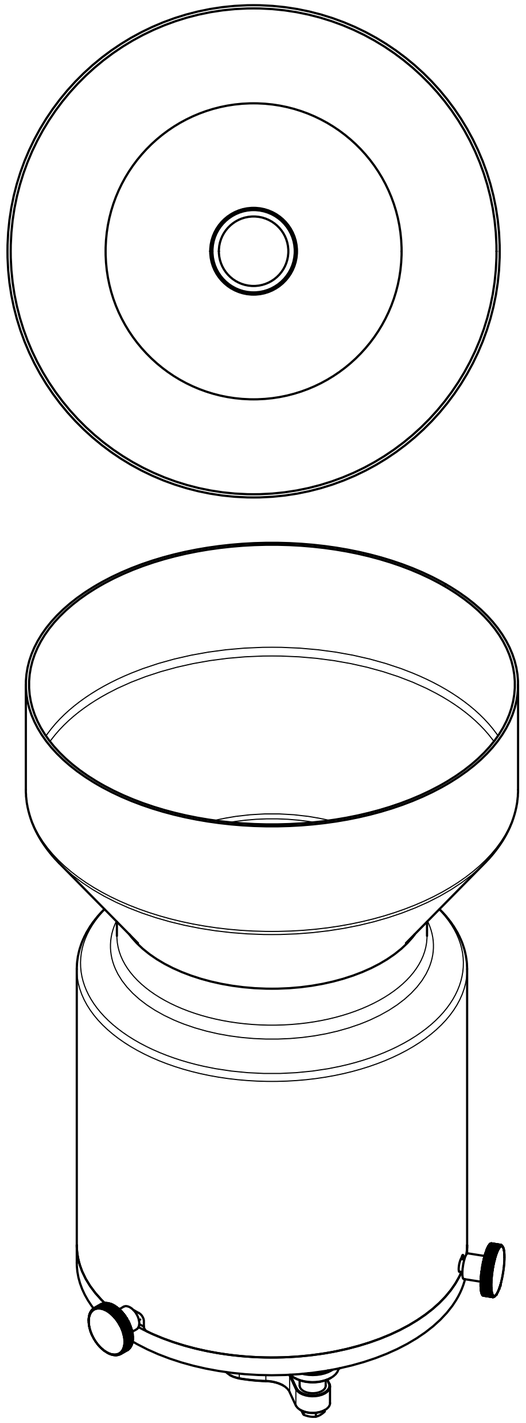

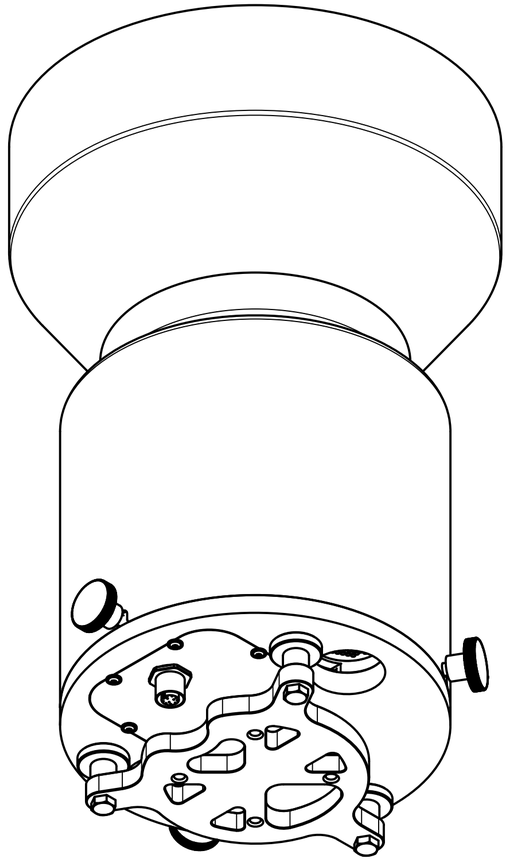

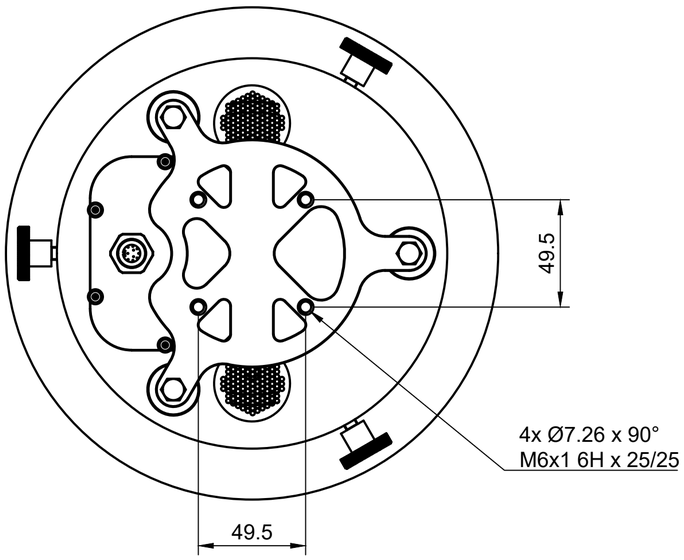

Qeolux	PROJECT RG400			
	TITLE RG400 Assembly Drawing			
DATE 14.01.2026.	SIZE A2	DWG NO GLX2025267-A001		REV RevA
APPROVED T.G.				
CHECKED T.G.	SCALE 1:2 (From parent)	MATERIAL ----		SHEET 1/1
DRAWN I.G.				