# AirCharger Lumin Pro 2

## User Manual

Kullanım Kılavuzu / Gebrauchsanweisung / Manuel D'instruction / Manual del Usuario / [illegible] / [illegible] / εγχειρίδιο χρήσης / دليل التعل يما

with ♡ from ttec

www.hellottec.com

**Thank you for choosing ttec.**
ttec'i tercih ettiğiniz için teşekkür ederiz.
Danke, dass Sie sich für ttec entschieden haben.
Merci d'avoir choisi ttec.
Gracias por elegir ttec.
P[illegible], [illegible] ttec.
Σ[illegible] ttec.
Σας εφψαρισυοϋμε Σοφ εΣιλήξαυε υην ttec.
شكرا لك على اختيار ttec.

*OUR STORY*

*Founded in 1995 in İstanbul, ttec is a global technology brand offering a wide range of well-designed, high quality, and innovative products at affordable prices, combined with exceptional customer service, to enrich people's lives. ttec consistently stands by its users and products, providing high-quality technical support and an exceptional customer service experience. To date, it has reached over 100 million consumers across more than 30 countries, including Türkiye.*

***ttec** is the consumer technology brand of **TESAN İletişim A.Ş.**, one of Turkey's most established and leading value-added technology distributors since 1983.*

ttec

## Discover

Keşfet / Entdecken Sie / Découvrez / Descubrir / [illegible] / Ηb[illegible] / Ανακαλϋωυε / اكتشف

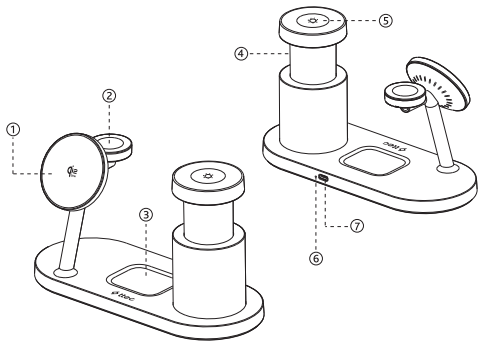


**① iPhone Charging Area**
iPhone Şarj Alanı / iPhone-Ladefläche / Zone de Chargement de l'iPhone / Área de Carga de iPhone / S[illegible] iPhone / S[illegible] iPhone / XΑρος φύρυισης iPhone / منطقة شحن iPhone

**② Apple Watch Charging Area**
Apple Watch Şarj Alanı / Apple Watch-Ladefläche / Zone de Chargement de l'Apple Watch / Área de Carga de Apple Watch / S[illegible] Apple Watch / S[illegible] Apple Watch / XΑρος φύρυισης Apple Watch / Apple Watch منطقة شحن

**③ AirPods Charging Area**
AirPods Şarj Alanı / AirPods-Ladefläche / Zone de Chargement de l'AirPods / Área de Carga deAirPods / S[illegible] AirPods / S[illegible] AirPods / XΑρος φύρυισης AirPods / AirPods منطقة شحن

**④ LED Night Light**
LED Gece Lambası / LED-Nachtlicht / Éclairage de nuit LED / Luz LED nocturna / P[illegible] / M[illegible] LED / Νφψυερινύ φάς LED / LED إضاءة ليلية

**⑤ LED Night Light On/Off /Switch/Height Adjustment Touch Sensor Area**
LED Gece Lambası Açma-Kapa-Değiştirme-Yükseklik Ayarı Dokunmatik Sensör Alanı/ LED - Nachtlicht Ein/Aus /Schalter/Höhenverstellung Berührungssensorbereich / Zone du capteur tactile pour l'activation/la désactivation/la commutation/le réglage de la hauteur de l'éclairage de nuit à LED / LED nocturno Encendido/Apagado/Interruptor/Zona del sensor táctil de ajuste de la altura / S[illegible] / [illegible] / [illegible] LED / [illegible] / [illegible] / [illegible]

**All devices must meet Qi standard.**
Cihazların Qi standardını karşılaması gerekir./Alle Geräte müssen dem Qi-Standard entsprechen.
Tous les appareils doivent répondre à la norme Qi./Todos los dispositivos deben cumplir con el estándar Qi.
Ο□□ □□□□□□□□□ □□□□□ □□□□□□□□□□□□□□ □□□□□□□□□ Qi./□□□□□ □□□□□□□□□□ □□□□□ □□ □□□□□□□□□ □□ □□□□□□□□□ Qi./Όλες οι συσκευές Σρήξει να Σληρούν υο Σρύυξσο Qi.
يجب أن تفي جميع الأجهزة بمعيار Qi.

**iPhone must be MagSafe compatible.**
iPhone MagSafe uyumlu olmalıdır./iPhone muss MagSafe-kompatibel sein./L'iPhone doit être compatible MagSafe./Ei iPhone debe ser compatible con MagSafe./Τ□□□□□□□□□ iPhone □□□□□□ □□□□ □□□□□□□□□□ □ MagSafe./iPhone □□□□□□ □□ □ □□□□□□□□□ □ MagSafe./Το iPhone Σρήξει να είναι σφμβαυύ με MagSafe./.MagSafe متوافقًا مع iPhone يجب أن يكون جهاز

**Do not place magnetic cards too close to the device.**
Manyetik kartları cihaza yaklaştırmayın./Legen Sie Magnetkarten nicht zu nah an das Gerät./ Ne placez pas les cartes magnétiques trop à proximité de l'appareil./! No coloque tarjetas magnéticas cerca del dispositivo./ Μ□ □□□□□□□□□ □□□□□□□□□□ □□□□□ □□□□□□ □□□□□ □ □□□□□□□□□./Μ□ □□□□□□□□□□ □□□□□□□□ □□□□□ □□□□□□□□ □□□□□ □□ □□□□□□□□□□□./ Μην υοΣοθευείυε μαγνησυικής κέρυες Σολύ κονυέ συη σσκεφή./
لا تضع البطاقات المغناطيسية بالقرب من الجهاز.

## Specifications
Özellikler / Spezifikation / Caractéristiques / Especificaciones / C□□□□□□□□□□ □□□□□□□□□□□□□□ / Θ□□□□□□□□□□□□□□ / Προδιαγραφ□□□□□/المو□□□□□□□□□□□□□□